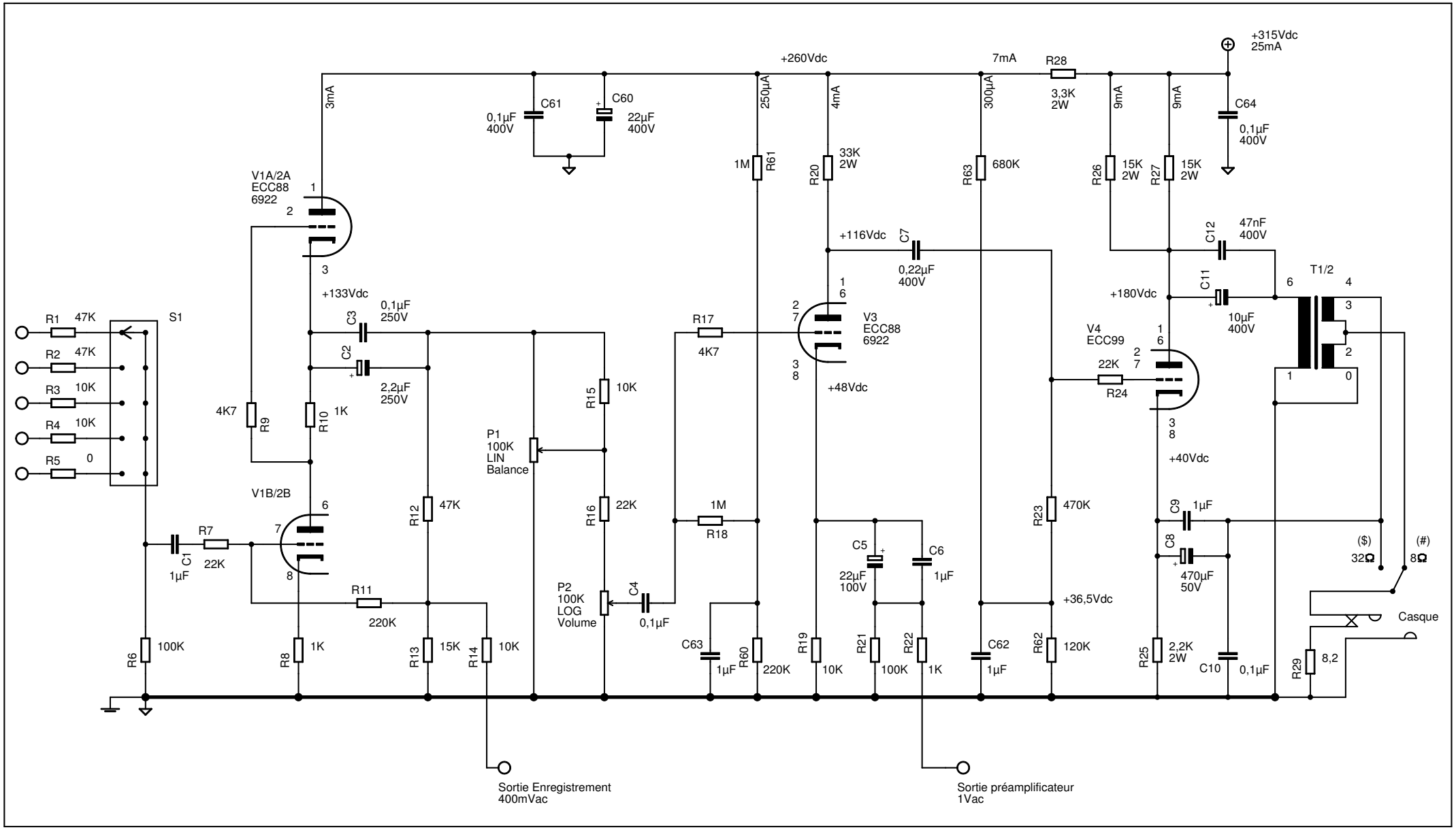

13/08/2007 09:18:55 f=0.90 E:\Program Files Bis\CAD\EAGLE-4.13\projects\P1 New\P1 New Préampli-ed4.sch (Sheet: 1/1)