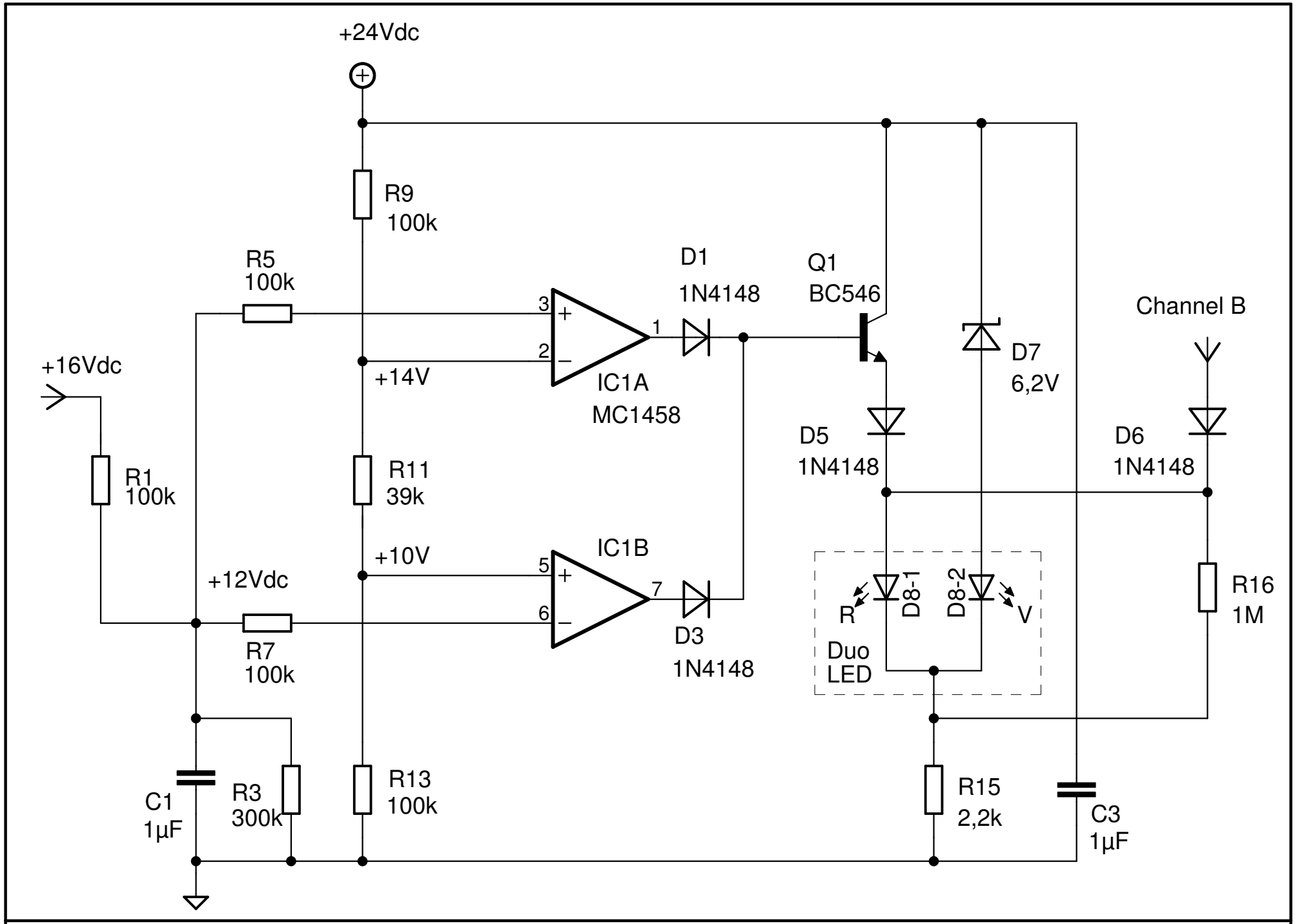

SE300B - Monitoring

NovoTone